6-Bit, Programmable 2-, 3-, 4-Phase Synchronous Buck Controller

ADP3168

FEATURES

Selectable 2-, 3-, or 4-phase operation at up to 1 MHz per phase
±10 mV worst-case differential sensing error over temperature
Logic-level PWM outputs for interface to external high power drivers
Active current balancing between all output phases
Built-in Power Good/crowbar blanking supports
On-the-fly VID code changes
6-bit digitally programmable 0.8375 V to 1.6 V output
Programmable short-circuit protection with programmable latch-off delay

APPLICATIONS

Desktop PC power supplies for:
Next generation Intel® processors
VRM modules

GENERAL DESCRIPTION

The ADP3168 is a highly efficient, multiphase, synchronous buck switching regulator controller optimized for converting a 12 V main supply into the core supply voltage required by high performance Intel processors. It uses an internal 6-bit DAC to read a voltage identification (VID) code directly from the processor, which is used to set the output voltage between 0.8375 V and 1.6 V, and uses a multimode PWM architecture to drive the logic-level outputs at a programmable switching frequency that can be optimized for VR size and efficiency. The phase relationship of the output signals can be programmed to provide 2-, 3-, or 4-phase operation, allowing for the construction of up to four complementary buck switching stages.

The ADP3168 also includes programmable no-load offset and slope functions to adjust the output voltage as a function of the load current so that it is always optimally positioned for a system transient. The ADP3168 also provides accurate and reliable short-circuit protection, adjustable current limiting, and a delayed Power Good output that accommodates on-the-fly output voltage changes requested by the CPU.

The device is specified over the commercial temperature range of 0°C to 85°C and is available in a 28-lead TSSOP package.

FUNCTIONAL BLOCK DIAGRAM

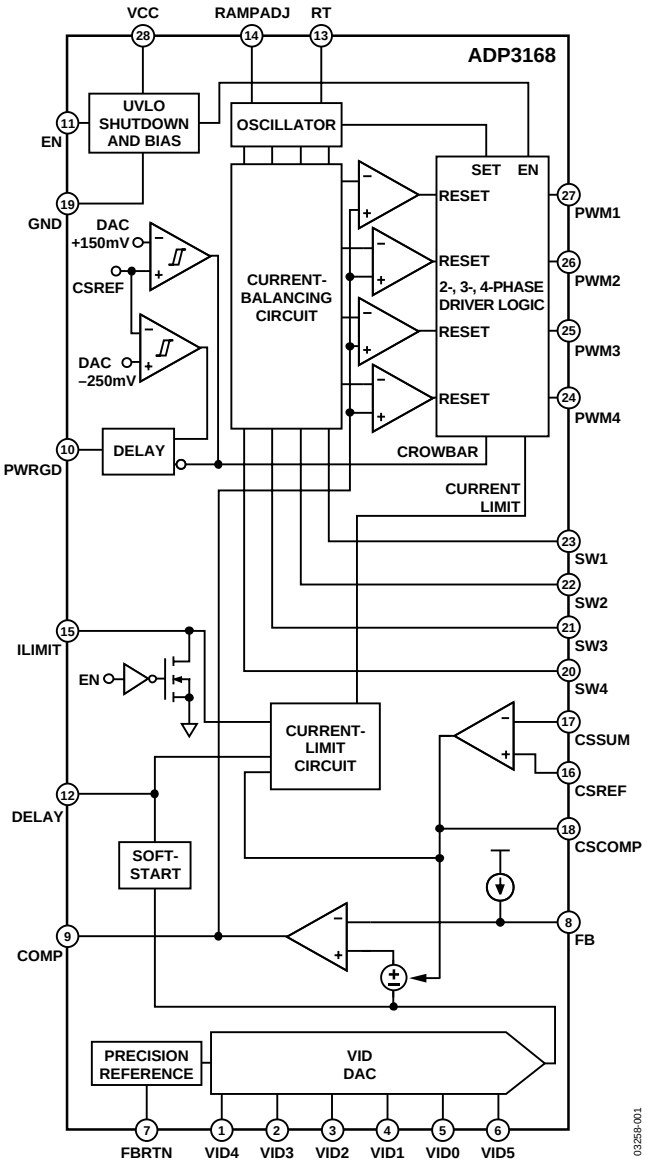

Figure 1.

Rev. B

Information furnished by Analog Devices is believed to be accurate and reliable. However, no responsibility is assumed by Analog Devices for its use, nor for any infringements of patents or other rights of third parties that may result from its use. Specifications subject to change without notice. No license is granted by implication or otherwise under any patent or patent rights of Analog Devices. Trademarks and registered trademarks are the property of their respective owners.

One Technology Way, P.O. Box 9106, Norwood, MA 02062-9106, U.S.A.
Tel: 781.329.4700 **www.analog.com**
Fax: 781.326.8703
© 2004 Analog Devices, Inc. All rights reserved.

TABLE OF CONTENTS

Specifications ... 3

Absolute Maximum Ratings ... 5

ESD Caution ... 5

Pin Configuration and Function Descriptions ... 6

Typical Performance Characteristics and Test Circuits ... 7

Theory of Operation ... 9

Number of Phases ... 9

Master Clock Frequency ... 9

Output Voltage Differential Sensing ... 9

Output Current Sensing ... 9

Active Impedance Control Mode ... 10

Current-Control Mode and Thermal Balance ... 10

Voltage Control Mode ... 10

Soft Start ... 10

Current-Limit, Short-Circuit, and Latch-Off Protection ... 11

Dynamic VID ... 12

Power-Good Monitoring ... 12

Output Crowbar ... 12

Output Enable and UVLO ... 12

Application Information ... 13

Setting the Clock Frequency ... 13

Soft Start and Current Limit Latch-Off Delay Times ... 13

Inductor Selection ... 13

Designing an Inductor ... 15

Selecting a Standard Inductor ... 15

Output Droop Resistance ... 15

Inductor DCR Temperature Correction ... 16

Output Offset ... 16

C_{OUT} Selection ... 17

Power MOSFETs ... 18

Ramp Resistor Selection ... 19

COMP Pin Ramp ... 19

Current-Limit Set Point ... 19

Feedback Loop Compensation Design ... 19

C_{IN} Selection and Input Current di/dt Reduction ... 21

Tuning Procedure for the ADP3168 ... 21

Layout and Component Placement ... 23

General Recommendations ... 23

Power Circuitry ... 23

Signal Circuitry ... 23

Outline Dimensions ... 24

Ordering Guide ... 24

REVISION HISTORY

11/04—Rev. A to Rev. B

Changes to Specifications ... 3
Updated Outline Dimensions ... 24
Changes to Ordering Guide ... 24

4/03—Data Sheet Changed from Rev. 0 to Rev. A.

Changes to Specifications ... 2

SPECIFICATIONS

All limits at temperature extremes are guaranteed via correlation using standard statistical quality control (SQC). VCC = 12 V, FBRTN = GND, T_A = 0°C to 85°C, unless otherwise noted.

Table 1.

Parameter	Symbol	Conditions	Min	Typ	Max	Unit
ERROR AMPLIFIER						
Output Voltage Range	V_{COMP}		0.5		3.5	V
Accuracy	V_{FB}	Relative to nominal DAC output, Referenced to FBRTN, CSSUM = CSCOMP; see Figure 10	−10		+10	mV
Line Regulation	ΔV_{FB}	VCC = 10 V to 14 V		0.05		%
Input Bias Current	I_{FB}		14	15.5	17	µA
FBRTN Current	I_{FBRTN}			90	120	µA
Output Current	$I_{O(ERR)}$	FB forced to V_{OUT} − 3%		500		µA
Gain Bandwidth Product	$GBW_{(ERR)}$	COMP = FB		20		MHz
Slew Rate		C_{COMP} = 10 pF		25		V/µs
VID INPUTS						
Input Low Voltage	$V_{IL(VID)}$				0.4	V
Input High Voltage	$V_{IH(VID)}$		0.8			V
Input Current, Input Voltage Low	$I_{IL(VID)}$	VID(X) = 0 V		−20	−30	µA
Input Current, Input Voltage High	$I_{IH(VID)}$	VID(X) = 1.25 V		15	25	µA
Pull-Up Resistance	R_{VID}		35	60	115	kΩ
Internal Pull-Up Voltage			0.825	1.00		V
VID Transition Delay Time[1]		VID code change to FB change	400			ns
No CPU Detection Turn-Off Delay Time		VID code change to 11111 to PWM going low	400			ns
OSCILLATOR						
Frequency Range[1]	f_{OSC}		0.25		4	MHz
Frequency Variation	f_{PHASE}	T_A = 25°C, R_T = 250 kΩ, 4-phase	155	200	245	kHz
		T_A = 25°C, R_T = 115 kΩ, 4-phase		400		kHz
		T_A = 25°C, R_T = 75 kΩ, 4-phase		600		kHz
Output Voltage	V_{RT}	R_T = 100 kΩ to GND	1.9	2.0	2.1	V
RAMPADJ Output Voltage	$V_{RAMPADJ}$	RAMPADJ − FB	−50		+50	mV
RAMPADJ Input Current Range	$I_{RAMPADJ}$		0		100	µA
CURRENT SENSE AMPLIFIER						
Offset Voltage	$V_{OS(CSA)}$	CSSUM − CSREF; see Figure 5	−1.5		+1.5	mV
Input Bias Current	$I_{BIAS(CSA)}$		−50		+50	nA
Gain Bandwidth Product	$GBW_{(CSA)}$			10		MHz
Slew Rate		C_{CSCOMP} = 10 pF		10		V/µs
Input Common-Mode Range		CSSUM and CSREF	0		3	V
Positioning Accuracy	ΔV_{FB}	See Figure 6	−77	−80	−83	mV
Output Voltage Range		I_{CSCOMP} = ±100 µA	0.05		3.3	V
Output Current	I_{CSCOMP}			500		µA
CURRENT-BALANCE CIRCUIT						
Common-Mode Range	$V_{SW(X)CM}$		−600		+200	mV
Input Resistance	$R_{SW(X)}$	SW(X) = 0 V	20	30	40	kΩ
Input Current	$I_{SW(X)}$	SW(X) = 0 V	4	7	10	µA
Input Current Matching	$\Delta I_{SW(X)}$	SW(X) = 0 V	−5		+5	%

[1] Guaranteed by design, not tested in production.

Parameter	Symbol	Conditions	Min	Typ	Max	Unit
CURRENT-LIMIT COMPARATOR						
ILIMIT Output Voltage						
Normal Mode	$V_{ILIMIT(NM)}$	EN > 1.7 V, R_{ILIMIT} = 250 kΩ	2.9	3	3.1	V
Shutdown Mode	$V_{ILIMIT(SD)}$	EN > 0.8 V, I_{ILIMIT} = −100 µA			400	mV
Output Current, Normal Mode	$I_{ILIMIT(NM)}$	EN > 1.7 V, R_{ILIMIT} = 250 kΩ		12		µA
Current-Limit Threshold Voltage	V_{CL}	$V_{CSREF} - V_{CSCOMP}$, R_{ILIMIT} = 250 kΩ	105	125	145	mV
Current-Limit Setting Ratio		V_{CL}/I_{ILIMIT}		10.4		mV/µA
DELAY Normal Mode Voltage	$V_{DELAY(NM)}$		2.9	3	3.1	V
DELAY Overcurrent Threshold	$V_{DELAY(OC)}$		1.7	1.8	1.9	V
Latch-Off Delay Time	t_{DELAY}	R_{DELAY} = 250 kΩ, C_{DELAY} = 4.7 nF		600		µs
SOFT START						
Output Current, Soft-Start Mode	$I_{DELAY(SS)}$	During startup, DELAY < 2.8 V	15	20	25	µA
Soft-Start Delay Time	$t_{DELAY(SS)}$	R_{DELAY} = 250 kΩ, C_{DELAY}= 4.7 nF VID code = 011111		350		µs
ENABLE INPUT						
Input Low Voltage	$V_{IL(EN)}$				0.4	V
Input High Voltage	$V_{IH(EN)}$		0.8			V
Input Current, Input Voltage Low	$I_{IL(EN)}$	EN = 0 V	−1		+1	µA
Input Current, Input Voltage High	$I_{IH(EN)}$	EN = 1.25 V		10	25	µA
POWER-GOOD COMPARATOR						
Undervoltage Threshold	$V_{PWRGD(UV)}$	Relative to nominal DAC output	−200	−250	−325	mV
Overvoltage Threshold	$V_{PWRGD(OV)}$	Relative to nominal DAC output	90	150	200	mV
Output Low Voltage	$V_{OL(PWRGD)}$	$I_{PWRGD(SINK)}$ = 4 mA		225	400	mV
Power-Good Delay Time						
VID Code Changing			100	250		µs
VID Code Static				200		ns
Crowbar Trip Point	$V_{CROWBAR}$	Relative to nominal DAC output	90	150	200	mV
Crowbar Reset Point		Relative to FBRTN	450	550	650	mV
Crowbar Delay Time	$t_{CROWBAR}$	Overvoltage to PWM going low				
VID Code Changing			100	250		µs
VID Code Static				400		ns
PWM OUTPUTS						
Output Voltage Low	$V_{OL(PWM)}$	$I_{PWM(SINK)}$ = 400 µA		160	500	mV
Output Voltage High	$V_{OH(PWM)}$	$I_{PWM(SOURCE)}$ = 400 µA	4.0	5.0		V
SUPPLY						
DC Supply Current				5	8	mA
UVLO Threshold Voltage	V_{UVLO}	VCC rising	6.5	6.9	7.3	V
UVLO Hysteresis			0.7	0.9	1.1	V

ABSOLUTE MAXIMUM RATINGS

Table 2.

Parameter	Rating
VCC	−0.3 V to +15 V
FBRTN	−0.3 V to +0.3 V
VID0 to VID5, EN, DELAY, ILIMIT, CSCOMP, RT, PWM1 to PWM4, COMP	−0.3 V to +5.5 V
SW1-SW4	−5 V to +25 V
All Other Inputs and Outputs	−0.3 V to VCC + 0.3 V
Operating Ambient Temperature Range	0°C to 85°C
Operating Junction Temperature	125°C
Storage Temperature Range	−65°C to +150°C
Junction to Air Thermal Resistance (θ_{JA})	100°C/W
Lead Temperature (Soldering, 10 sec)	300°C
Vapor Phase (60 sec)	215°C
Infrared (15 sec)	220°C

Stresses above those listed under Absolute Maximum Ratings may cause permanent damage to the device. This is a stress rating only; functional operation of the device at these or any other conditions above those listed in the operational sections of this specification is not implied. Exposure to absolute maximum rating conditions for extended periods may affect device reliability. Absolute maximum ratings apply individually only, not in combination. Unless otherwise specified, all other voltages are referenced to GND.

ESD CAUTION

ESD (electrostatic discharge) sensitive device. Electrostatic charges as high as 4000 V readily accumulate on the human body and test equipment and can discharge without detection. Although this product features proprietary ESD protection circuitry, permanent damage may occur on devices subjected to high energy electrostatic discharges. Therefore, proper ESD precautions are recommended to avoid performance degradation or loss of functionality.

PIN CONFIGURATION AND FUNCTION DESCRIPTIONS

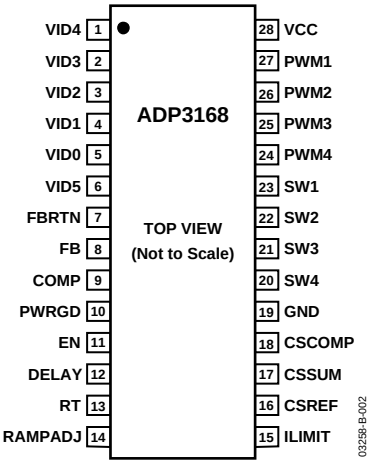

Figure 2. Pin Configuration

Table 3. Pin Function Descriptions

Pin No.	Mnemonic	Function
1 to 6	VID4 to VID0, VID5	Voltage Identification DAC Inputs. These six pins are pulled up to an internal reference, providing a Logic 1 if left open. When in normal operation mode, the DAC output programs the FB regulation voltage from 0.8375 V to 1.6 V. Leaving VID4 through VID0 open results in the ADP3168 going into a no CPU mode, shutting off its PWM outputs.
7	FBRTN	Feedback Return. VID DAC and error amplifier reference for remote sensing of the output voltage.
8	FB	Feedback Input. Error amplifier input for remote sensing of the output voltage. An external resistor between this pin and the output voltage sets the no -load offset point.
9	COMP	Error Amplifier Output and Compensation Point.
10	PWRGD	Power Good Output. Open-drain output that pulls to GND when the output voltage is outside the proper operating range.
11	EN	Power Supply Enable Input. Pulling this pin to GND disables the PWM outputs.
12	DELAY	Soft-Start Delay and Current Limit Latch-Off Delay Setting Input. An external resistor and capacitor connected between this pin and GND set the soft-start ramp-up time and the overcurrent latch-off delay time.
13	RT	Frequency Setting Resistor Input. An external resistor connected between this pin and GND sets the oscillator frequency of the device.
14	RAMPADJ	PWM Ramp Current Input. An external resistor from the converter input voltage to this pin sets the internal PWM ramp.
15	ILIMIT	Current Limit Set Point/Enable Output. An external resistor from this pin to GND sets the current limit threshold of the converter. This pin is actively pulled low when the ADP3168 EN input is low or when VCC is below its UVLO threshold to signal to the driver IC that the driver high-side and low-side outputs should go low.
16	CSREF	Current Sense Reference Voltage Input. The voltage on this pin is used as the reference for the current-sense amplifier and the Power Good and crowbar functions. This pin should be connected to the common point of the output inductors.
17	CSSUM	Current-Sense Summing Node. External resistors from each switch node to this pin sum the average inductor currents to measure the total output current.
18	CSCOMP	Current Sense Compensation Point. A resistor and a capacitor from this pin to CSSUM determine the slope of the load line and the positioning loop response time.
19	GND	Ground. All internal biasing and the logic output signals of the device are referenced to this ground.
20 to 23	SW4 to SW1	Current Balance Inputs. Inputs for measuring the current level in each phase. The SW pins of unused phases should be left open.
24 to 27	PWM4 to PWM1	Logic-Level PWM Outputs. Each output is connected to the input of an external MOSFET driver, such as the ADP3413 or ADP3418. Connecting the PWM3 and/or PWM4 outputs to GND causes that phase to turn off, allowing the ADP3168 to operate as a 2-, 3 -, or 4 -phase controller.
28	VCC	Supply Voltage for the Device.

TYPICAL PERFORMANCE CHARACTERISTICS AND TEST CIRCUITS

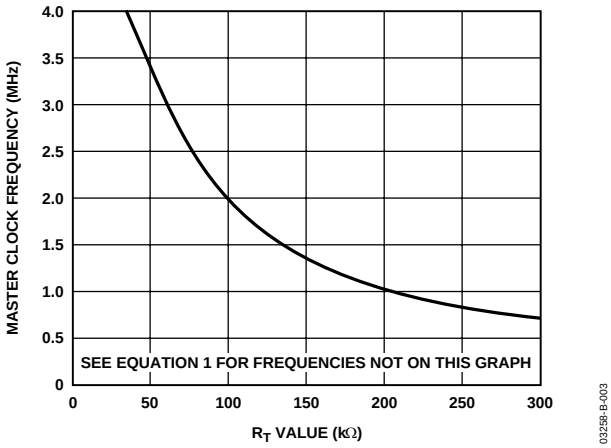

Figure 3. Master Clock Frequency vs. RT

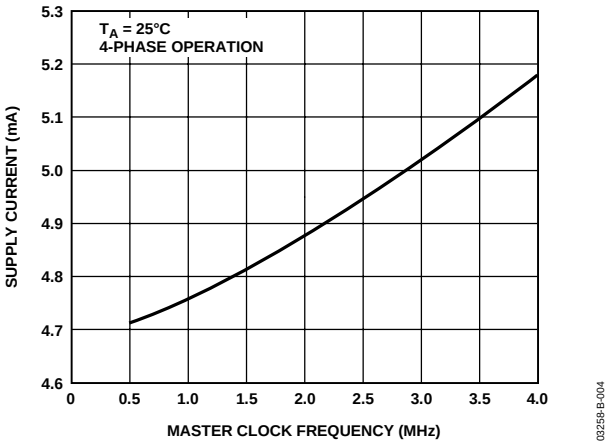

Figure 4. Supply Current vs. Master Clock Frequency

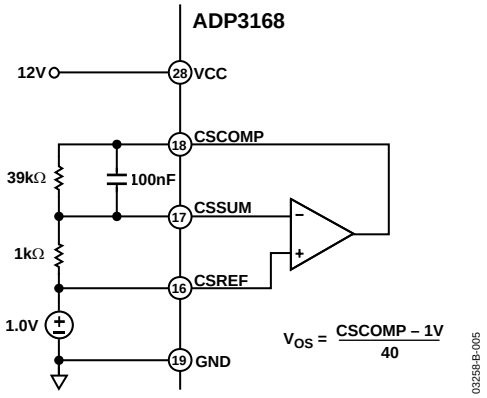

Figure 5. Test Circuit 1, Current Sense Amplifier V_{OS}

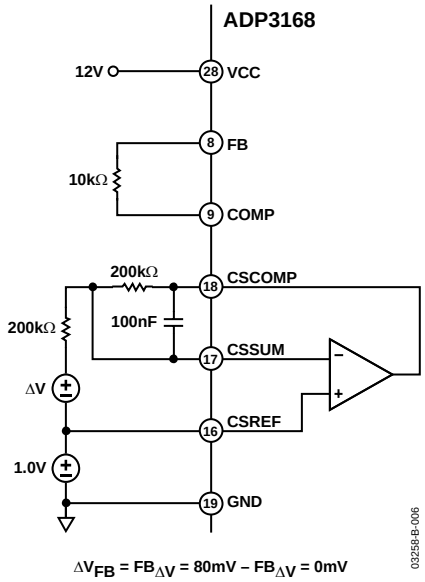

Figure 6. Test Circuit, Positioning Voltage

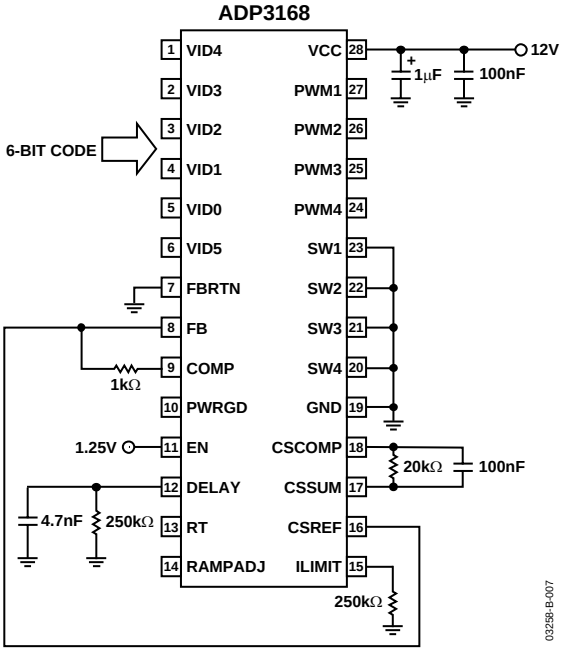

Figure 7. Test Circuit 3, Closed-Loop Output Voltage Accuracy

Table 4. Output Voltage vs. VID Code (X = Don't Care)

VID4	VID3	VID2	VID1	VID0	VID5	$V_{OUT(NOM)}$
1	1	1	1	1	X	No CPU
0	1	0	1	0	0	0.8375 V
0	1	0	0	0	0	0.850 V
0	1	0	0	1	0	0.8625 V
0	1	0	0	0	1	0.875 V
0	1	0	0	0	0	0.8875 V
0	0	1	1	1	1	0.900 V
0	0	1	1	1	0	0.9125 V
0	0	1	1	0	1	0.925 V
0	0	1	1	0	0	0.9375 V
0	0	1	0	1	1	0.950 V
0	0	1	0	1	0	0.9625 V
0	0	1	0	0	1	0.975 V
0	0	1	0	0	0	0.9875 V
0	0	0	1	1	1	1.000 V
0	0	0	1	1	0	1.0125 V
0	0	0	1	0	1	1.025 V
0	0	0	1	0	0	1.0375 V
0	0	0	0	1	1	1.050 V
0	0	0	0	1	0	1.0625 V
0	0	0	0	0	1	1.075 V
0	0	0	0	0	0	1.0875 V
1	1	1	1	0	1	1.100 V
1	1	1	1	0	0	1.1125 V
1	1	1	0	1	1	1.125 V
1	1	1	0	1	0	1.1375 V
1	1	1	0	0	1	1.150 V
1	1	1	0	0	0	1.1625 V
1	1	0	1	1	1	1.175 V
1	1	0	1	1	0	1.1875 V
1	1	0	1	0	1	1.200 V
1	1	0	1	0	0	1.2125 V
1	1	0	0	1	1	1.225 V
1	1	0	0	1	0	1.2375 V
1	1	0	0	0	1	1.250 V
1	1	0	0	0	0	1.2625 V
1	0	1	1	1	1	1.275 V
1	0	1	1	1	0	1.2875 V
1	0	1	1	0	1	1.300 V
1	0	1	1	0	0	1.3125 V
1	0	1	0	1	1	1.325 V
1	0	1	0	1	0	1.3375 V
1	0	1	0	0	1	1.350 V
1	0	1	0	0	0	1.3625 V
1	0	0	1	1	1	1.375 V
1	0	0	1	1	0	1.3875 V
1	0	0	1	0	1	1.400 V
1	0	0	1	0	0	1.4125 V
1	0	0	0	1	1	1.425 V
1	0	0	0	1	0	1.4375 V
1	0	0	0	0	1	1.450 V
1	0	0	0	0	0	1.4625 V
0	1	1	1	1	1	1.475 V
0	1	1	1	1	0	1.4875 V
0	1	1	1	0	1	1.500 V
0	1	1	1	0	0	1.5125 V
0	1	1	0	1	1	1.525 V
0	1	1	0	1	0	1.5375 V
0	1	1	0	0	1	1.550 V
0	1	1	0	0	0	1.5625 V
0	1	0	1	1	1	1.575 V
0	1	0	1	1	0	1.5875 V
0	1	0	1	0	1	1.600 V

THEORY OF OPERATION

The ADP3168 combines a multimode, fixed frequency PWM control with multiphase logic outputs for use in 2-, 3-, and 4-phase synchronous buck CPU core supply power converters. The internal 6-bit VID DAC conforms to Intel's VRD/VRM 10 specifications. Multiphase operation is important for producing the high currents and low voltages demanded by today's microprocessors. Handling the high currents in a single-phase converter would place high thermal demands on system components such as inductors and MOSFETs.

The multimode control of the ADP3168 ensures a stable, high performance topology for

- Balancing currents and thermals between phases
- High speed response at the lowest possible switching frequency and output decoupling
- Minimizing thermal switching losses due to lower frequency operation
- Tight load-line regulation and accuracy
- High current output resulting from having up to a 4-phase operation
- Reduced output ripple due to multiphase cancellation
- PC board layout noise immunity
- Ease of use and design due to independent component selection
- Flexibility in operation for tailoring design to low cost or high performance

NUMBER OF PHASES

The number of operational phases and their phase relationship is determined by the internal circuitry that monitors the PWM outputs. Normally, the ADP3168 operates as a 4-phase PWM controller. Grounding the PWM4 pin programs 3-phase operation; grounding the PWM3 and PWM4 pins programs 2-phase operation.

When the ADP3168 is enabled, the controller outputs a voltage on PWM3 and PWM4 of approximately 550 mV. An internal comparator checks each pin's voltage vs. a threshold of 400 mV. If the pin is grounded, the voltage is below the threshold and the phase is disabled. The output resistance of the PWM pin is approximately 5 kΩ during this detection time. Any external pull-down resistance connected to the PWM pin should be at least 25 kΩ to ensure proper operation. The phase detection is made during the first two clock cycles of the internal oscillator. After this time, if the PWM output is not grounded, the 5 kΩ resistance is removed and switches between 0 V and 5 V. If the PWM output was grounded, it remains off.

The PWM outputs become logic-level devices once normal operation starts. The detection is normal and is intended for driving external gate drivers such as the ADP3418. Because each phase is monitored independently, operation approaching 100% duty cycle is possible. Also, more than one output can be on at any given time for overlapping phases.

MASTER CLOCK FREQUENCY

The clock frequency of the ADP3168 is set with an external resistor connected from the RT pin to ground. The frequency follows the graph in Figure 3. To determine the frequency per phase, the clock is divided by the number of phases in use. If PWM4 is grounded, divide the master clock by 3 for the frequency of the remaining phases. If PWM3 and PWM4 are grounded, divide by 2. If all phases are in use, divide by 4.

OUTPUT VOLTAGE DIFFERENTIAL SENSING

The ADP3168 combines differential sensing with a high accuracy VID DAC and reference and a low offset error amplifier to maintain a worst-case specification of ±10 mV differential sensing error with a VID input of 1.6000 V over its full operating output voltage and temperature range. The output voltage is sensed between the FB and FBRTN pins. FB should be connected through a resistor to the regulation point, usually the remote sense pin of the microprocessor. FBRTN should be connected directly to the remote sense ground point. The internal VID DAC and precision reference are referenced to FBRTN, which has a minimal current of 90 μA to allow accurate remote sensing. The internal error amplifier compares the output of the DAC to the FB pin to regulate the output voltage.

OUTPUT CURRENT SENSING

The ADP3168 provides a dedicated current sense amplifier (CSA) to monitor the total output current for proper voltage positioning vs. load current and for current limit detection. Sensing the load current at the output gives the total average current being delivered to the load, which is an inherently more accurate method than peak current detection or sampling the current across a sense element such as the low-side MOSFET. This amplifier can be configured several ways, depending on the objectives of the system:

- Output inductor ESR sensing without thermistor for lowest cost
- Output inductor ESR sensing with thermistor for improved accuracy with tracking of inductor temperature
- Sense resistors for most accurate measurements

The positive input of the CSA is connected to the CSREF pin, which is connected to the output voltage. The inputs to the amplifier are summed together through resistors from the sensing element (such as the switch node side of the output inductors) to the inverting input, CSSUM. The feedback resistor between CSCOMP and CSSUM sets the gain of the amplifier, and a filter capacitor is placed in parallel with this resistor. The gain of the amplifier is programmable by adjusting the feedback resistor to set the load line required by the microprocessor. The current information is then given as the difference of CSREF − CSCOMP. This difference signal is used internally to offset the VID DAC for voltage positioning and as a differential input for the current-limit comparator.

To provide the best accuracy for the current sensing, the CSA was designed to have a low offset input voltage. Also, the sensing gain is determined by external resistors so that it can be made extremely accurate.

ACTIVE IMPEDANCE CONTROL MODE

For controlling the dynamic output voltage droop as a function of output current, a signal proportional to the total output current at the CSCOMP pin can be scaled to be equal to the droop impedance of the regulator times the output current. This droop voltage is then used to set the input control voltage to the system. The droop voltage is subtracted from the DAC reference input voltage directly to tell the error amplifier where the output voltage should be. This differs from previous implementations and allows enhanced feed-forward response.

CURRENT-CONTROL MODE AND THERMAL BALANCE

The ADP3168 has individual inputs that are used for monitoring the current in each phase. This information is combined with an internal ramp to create a current-balancing feedback system that has been optimized for initial current balance accuracy and dynamic thermal balancing during operation. This current-balance information is independent of the average output current information used for positioning described previously.

The magnitude of the internal ramp can be set to optimize the transient response of the system. It also monitors the supply voltage for feed-forward control for changes in the supply. A resistor connected from the power input voltage to the RAMPADJ pin determines the slope of the internal PWM ramp. Detailed information about programming the ramp is given in the Application Information section.

External resistors can be placed in series with individual phases, for example, to create an intentional current imbalance so one phase may have better cooling and can support higher currents. Resistors R_{SW1} through R_{SW4} (see the typical applica-tion circuit in Figure 11) can be used for adjusting thermal balance. It is best to add these resistors during the initial design, so make sure placeholders are provided in the layout.

To increase the current in any given phase, make R_{SW} for that phase larger. (Make R_{SW} = 0 for the hottest phase and do not change during balancing.) Increasing R_{SW} to only 500 Ω makes a substantial increase in phase current. Increase each R_{SW} value by small amounts to achieve balance, starting with the coolest phase first.

VOLTAGE CONTROL MODE

A high gain bandwidth voltage mode error amplifier is used for the voltage-mode control loop. The control input voltage to the positive input is set via the VID 6-bit logic code, according to the voltages listed in Table 4. This voltage is also offset by the droop voltage for active positioning of the output voltage as a function of current, commonly known as active voltage positioning. The output of the amplifier is the COMP pin, which sets the termination voltage for the internal PWM ramps.

The negative input (FB) is tied to the output sense location with a resistor, R_B, and is used for sensing and controlling the output voltage at this point. A current source from the FB pin flowing through R_B is used for setting the no-load offset voltage from the VID voltage. The no-load voltage is negative with respect to the VID DAC. The main loop compensation is incorporated into the feedback network between FB and COMP.

SOFT START

The power-on ramp-up time of the output voltage is set with a capacitor and a resistor in parallel from the DELAY pin to ground. The RC time constant also determines the current-limit latch-off time, as explained in the following section. In UVLO or when EN is a logic low, the DELAY pin is held at ground. After the UVLO threshold is reached and EN is a logic high, the DELAY capacitor is charged up with an internal 20 μA current source. The output voltage follows the ramping voltage on the DELAY pin, limiting the inrush current. The soft-start time depends on the values of VID DAC and C_{DLY}, with a secondary effect from R_{DLY}. Refer to the Application Information section for detailed information on setting C_{DLY}.

When the PWRGD threshold is reached, the soft-start cycle is stopped and the DELAY pin is pulled up to 3 V. This ensures that the output voltage is at the VID voltage when the PWRGD signals to the system that the output voltage is good. If EN is taken low or VCC drops below UVLO, the DELAY capacitor is reset to ground to be ready for another soft-start cycle. Figure 8 shows a typical start-up sequence for the ADP3168.

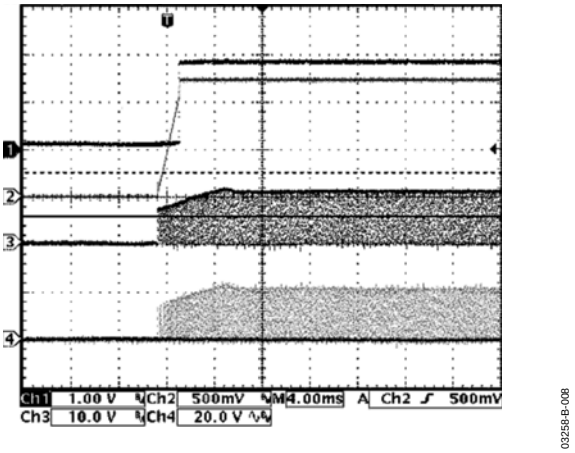

Figure 8. Start-Up Waveforms, Circuit of Figure 12. Channel 1—PWRGD, Channel 2—V_{OUT}, Channel 3—High-Side MOSFET V_{GS}, Channel 4—Low-Side MOSFET V_{GS}

CURRENT-LIMIT, SHORT-CIRCUIT, AND LATCH-OFF PROTECTION

The ADP3168 compares a programmable current-limit set point to the voltage from the output of the current-sense amplifier. The level of current limit is set with the resistor from the ILIMIT pin to ground. During normal operation, the voltage on ILIMIT is 3 V. The current through the external resistor is internally scaled to give a current-limit threshold of 10.4 mV/μA. If the difference in voltage between CSREF and CSCOMP rises above the current-limit threshold, the internal current-limit amplifier controls the internal COMP voltage to maintain the average output current at the limit.

After the limit is reached, the 3 V pull-up on the DELAY pin is disconnected, and the external delay capacitor is discharged through the external resistor. A comparator monitors the DELAY voltage and shuts off the controller when the voltage drops below 1.8 V. The current-limit latch-off delay time is therefore set by the RC time constant discharging from 3 V to 1.8 V. The Application Information section discusses the selection of C_{DLY} and R_{DLY}.

Because the controller continues to cycle the phases during the latch-off delay time, if the short is removed before the 1.8 V threshold is reached, the controller returns to normal operation. The recovery characteristic depends on the state of PWRGD. If the output voltage is within the PWRGD window, the controller resumes normal operation. However, if a short circuit has caused the output voltage to drop below the PWRGD threshold, a soft-start cycle is initiated.

The latch-off function can be reset either by removing and reapplying VCC to the ADP3168, or by pulling the EN pin low for a short time. To disable the short-circuit latch-off function, the external resistor to ground should be left open, and a high value (>1 MΩ) resistor should be connected from DELAY to VCC. This prevents the DELAY capacitor from discharging, so the 1.8 V threshold is never reached. The resistor has an impact on the soft-start time because the current through it adds to the internal 20 μA current source.

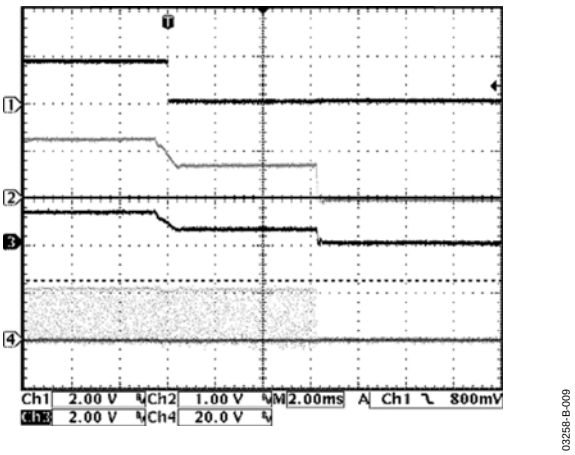

Figure 9. Overcurrent Latch-Off Waveforms, Circuit of Figure 11. Channel 1—PWRGD, Channel 2—V_{OUT}, Channel 3—CSCOMP Pin of ADP3168, Channel 4—High-Side MOSFET V_{GS}

During startup, when the output voltage is below 200 mV, a secondary current limit is active. This is necessary because the voltage swing of CSCOMP cannot go below ground. This secondary current limit controls the internal COMP voltage to the PWM comparators to 2 V. This limits the voltage drop across the low-side MOSFETs through the current-balance circuitry.

There is also an inherent per-phase current limit that protects individual phases in the case where one or more phases stop functioning because of a faulty component. This limit is based on the maximum normal mode COMP voltage.

DYNAMIC VID

The ADP3168 incorporates the ability to dynamically change the VID input while the controller is running. This allows the output voltage to change while the supply is running and supplying current to the load. This is commonly referred to as VID on-the-fly (OTF). A VID OTF can occur under either light load or heavy load conditions. The processor signals the controller by changing the VID inputs in multiple steps from the start code to the finish code. This change can be either positive or negative.

When a VID input changes state, the ADP3168 detects the change and ignores the DAC inputs for a minimum of 400 ns. This prevents a false code due to logic skew while the six VID inputs are changing. Additionally, the first VID change initiates the PWRGD and CROWBAR blanking functions for a minimum of 250 µs to prevent a false PWRGD or CROWBAR event. Each VID change resets the internal timer. Figure 10 shows VID on-the-fly performance when the output voltage is stepping up and the output current is switching between minimum and maximum values, which is the worst-case situation.

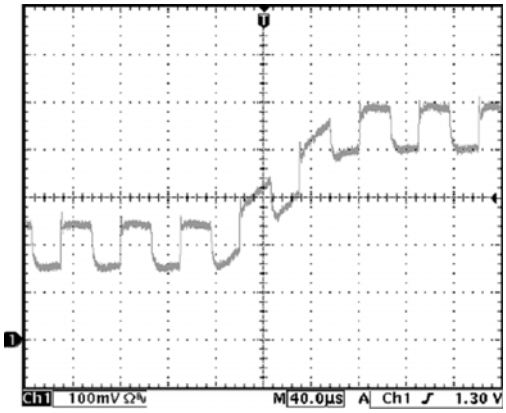

Figure 10. VID On-the-Fly Waveforms, Circuit of Figure 12. VID Change = 5 mV, 5 µs per Step, 50 Steps, I_{OUT} Change =5 A to 65 A

POWER-GOOD MONITORING

The Power-Good comparator monitors the output voltage via the CSREF pin. The PWRGD pin is an open-drain output whose high level (when connected to a pull-up resistor) indicates that the output voltage is within the nominal limits specified in Table 1 based on the VID voltage setting. PWRGD goes low if the output voltage is outside of this specified range. PWRGD is blanked during a VID OTF event for a period of 250 µs to prevent false signals during the time the output is changing.

OUTPUT CROWBAR

As part of the protection for the load and output components of the supply, the PWM outputs are driven low (turning on the low-side MOSFETs) when the output voltage exceeds the upper Power-Good threshold. This crowbar action stops once the output voltage has fallen below the release threshold of approximately 450 mV.

Turning on the low-side MOSFETs pulls down the output as the reverse current builds up in the inductors. If the output overvoltage is due to a short of the high-side MOSFET, this action current limits the input supply or blows its fuse, protecting the microprocessor from destruction.

OUTPUT ENABLE AND UVLO

The input supply (VCC) to the controller must be higher than the UVLO threshold, and the EN pin must be higher than its logic threshold for the ADP3168 to begin switching. If UVLO is less than the threshold or the EN pin is a logic low, the ADP3168 is disabled. This holds the PWM outputs at ground, shorts the DELAY capacitor to ground, and holds the ILIMIT pin at ground.

In the application circuit, the ILIMIT pin should be connected to the $\overline{OD}$ pins of the ADP3418 drivers. Because ILIMIT is grounded, this disables the drivers so that both DRVH and DRVL are grounded. This feature is important to prevent discharging of the output capacitors when the controller is shut off. If the driver outputs were not disabled, a negative voltage could be generated on the output due to the high current discharge of the output capacitors through the inductors.

APPLICATION INFORMATION

The design parameters for a typical Intel VRD 10 compliant CPU application are as follows:

- Input voltage (V_{IN}) = 12 V
- VID setting voltage (V_{VID}) = 1.500 V
- Duty cycle (D) = 0.125
- Nominal output voltage at no load (V_{ONL}) = 1.480 V
- Nominal output voltage at 65 A load (V_{OFL}) = 1.3955 V
- Static output voltage drop based on a 1.3 mΩ load line (R_O) from no load to full load
- (V_D) = V_{ONL} − V_{OFL} = 1.480 V − 1.3955 V = 84.5 mV
- Maximum output current (I_O) = 65 A
- Maximum output current step (ΔI_O) = 60 A
- Number of phases (n) = 3
- Switching frequency per phase (f_{SW}) = 267 kHz

SETTING THE CLOCK FREQUENCY

The ADP3168 uses a fixed-frequency control architecture. The frequency is set by an external timing resistor (R_T). The clock frequency and the number of phases determine the switching frequency per phase, which relates directly to switching losses and the sizes of the inductors and input and output capacitors. With n = 3 for three phases, a clock frequency of 800 kHz sets the switching frequency, f_{SW}, of each phase to 267 kHz, which represents a practical trade-off between the switching losses and the sizes of the output filter components. Figure 3 shows that to achieve an 800 kHz oscillator frequency, the correct value for R_T is 249 kΩ. Alternatively, the value for R_T can be calculated using

$$R_T = \frac{1}{\left(n \times f_{SW} \times 5.83\ \text{pF}\right) - \frac{1}{1.5\text{M}\Omega}} \quad (1)$$

where 5.83 pF and 1.5 MΩ are internal IC component values. For good initial accuracy and frequency stability, a 1% resistor is recommended.

SOFT START AND CURRENT LIMIT LATCH-OFF DELAY TIMES

Because the soft-start and current limit latch-off delay functions share the DELAY pin, these two parameters must be considered together. The first step is to set C_{DLY} for the soft-start ramp. This ramp is generated with a 20 µA internal current source. The value of R_{DLY} has a second-order impact on the soft-start time because it sinks part of the current source to ground. However, as long as R_{DLY} is kept greater than 200 kΩ, this effect is minor. The value for C_{DLY} can be approximated using

$$C_{DLY} = \left(20\ \mu A - \frac{V_{VID}}{2 \times R_{DLY}}\right) \times \frac{t_{ss}}{V_{VID}} \quad (2)$$

where t_{SS} is the desired soft-start time. Assuming an R_{DLY} of 390 kΩ and a desired a soft-start time of 3 ms, C_{DLY} is 36 nF.

The closest standard value for C_{DLY} is 39 nF. Once C_{DLY} has been chosen, R_{DLY} can be calculated for the current-limit latch-off time using

$$R_{DLY} = \frac{1.96 \times t_{DELAY}}{C_{DLY}} \quad (3)$$

If the result for R_{DLY} is less than 200 kΩ, a smaller soft-start time should be considered by recalculating the equation for C_{DLY}, or a longer latch-off time should be used. In no case should R_{DLY} be less than 200 k . In this example, a delay time of 8 ms gives R_{DLY} = 402 kΩ. The closest standard 5% value is 390 kΩ.

INDUCTOR SELECTION

The choice of inductance for the inductor determines the ripple current in the inductor. Less inductance leads to more ripple current, which increases the output ripple voltage and conduction losses in the MOSFETs but allows using smaller inductors and, for a specified peak-to-peak transient deviation, less total output capacitance. Conversely, a higher inductance means lower ripple current and reduced conduction losses but requires larger inductors and more output capacitance for the same peak-to-peak transient deviation. In any multiphase converter, a practical value for the peak-to-peak inductor ripple current is less than 50% of the maximum dc current in the same inductor. Equation 4 shows the relationship between the inductance, oscillator frequency, and peak-to-peak ripple current in the inductor.

Equation 5 can be used to determine the minimum inductance based on a given output ripple voltage.

$$I_R = \frac{V_{VID} \times (1 - D)}{f_{SW} \times L} \quad (4)$$

$$L \geq \frac{V_{VID} \times R_O \times (1 - (n \times D))}{f_{SW} \times V_{RIPPLE}} \quad (5)$$

Solving Equation 5 for a 10 mV p-p output ripple voltage yields:

$$L \geq \frac{1.5\ \text{V} \times 1.3\ \text{m}\Omega \times (1 - 0.375)}{267\ \text{kHz} \times 10\ \text{mV}} = 456\ \text{nH}$$

If the resulting ripple voltage is less than that designed for, the inductor can be made smaller until the ripple value is met. This allows optimal transient response and minimum output decoupling.

The smallest possible inductor should be used to minimize the number of output capacitors. Choosing a 600 nH inductor is a good starting point and gives a calculated ripple current of 8.2 A. The inductor should not saturate at the peak current of 25.8 A and should be able to handle the sum of the power dissipation caused by the average current of 22.7 A in the winding and core loss.

Another important factor in the inductor design is the DCR, which is used for measuring the phase currents. A large DCR causes excessive power losses, while too small a value leads to increased measurement error. A good rule is to have the DCR be about 1 to 1½ times the droop resistance (R_O). Our example uses an inductor with a DCR of 1.6 mΩ.

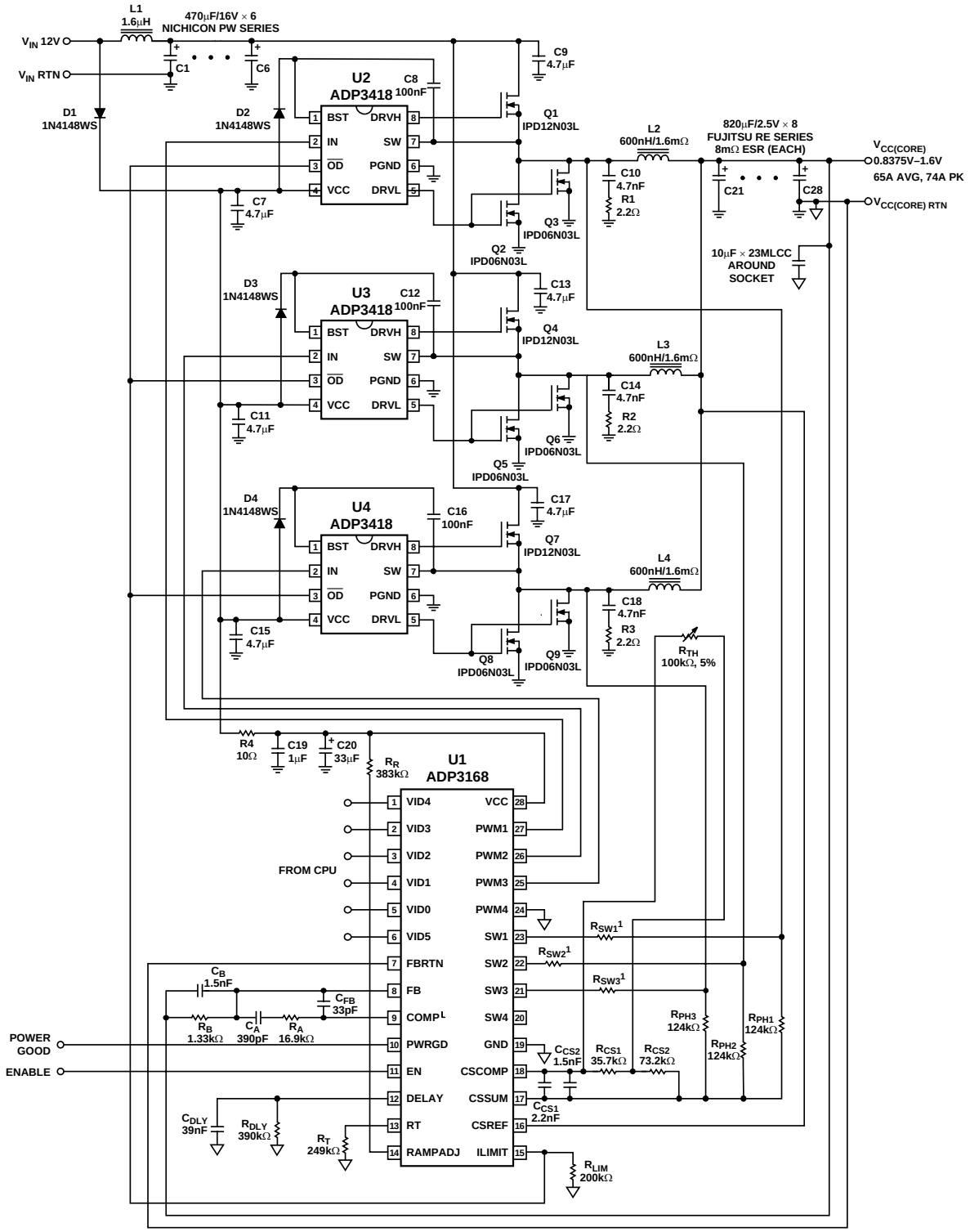

NOTE:
[1] FOR A DESCRIPTION OF OPTIONAL R_{SW} RESISTORS, SEE THE THEORY OF OPERATION SECTION.

Figure 11. 65 A Intel Pentium 4-CPU Supply Circuit, VRD 10 Design

DESIGNING AN INDUCTOR

Once the inductance and DCR are known, the next step is to either design an inductor or find a standard inductor that comes as close as possible to meeting the overall design goals. It is also important to have the inductance and DCR tolerance specified to control the accuracy of the system. 15% inductance and 8% DCR (at room temperature) are reasonable tolerances that most manufacturers can meet.

The first decision in designing the inductor is to choose the core material. There are several possibilities for providing low core loss at high frequencies. Two examples are the powder cores (e.g., Kool-Mμ® from Magnetics, Inc. or Micrometals) and the gapped soft ferrite cores (e.g., 3F3 or 3F4 from Philips). Low frequency powdered iron cores should be avoided due to their high core loss, especially when the inductor value is relatively low and the ripple current is high.

The best choice for a core geometry is a closed-loop type such as a pot core, PQ, U, or E core or toroid. A good compromise between price and performance is a core with a toroidal shape.

There are many useful references for quickly designing a power inductor, such as the following:

- Magnetic Designer Software
  Intusoft (www.intusoft.com)
- *Designing Magnetic Components for High-Frequency DC-DC Converters*, by William T. McLyman, Kg Magnetics, Inc., ISBN 1883107008

SELECTING A STANDARD INDUCTOR

The companies listed below can provide design consultation and deliver power inductors optimized for high power applications upon request.

Power Inductor Manufacturers

- Coilcraft
  (847)639-6400
  www.coilcraft.com
- Coiltronics
  (561)752-5000
  www.coiltronics.com
- Sumida Electric Company
  (510) 668-0660
  www.sumida.com
- Vishay Intertechnology
  (402) 563-6866
  www.vishay.com

OUTPUT DROOP RESISTANCE

The design requires that the regulator output voltage measured at the CPU pins drops when the output current increases. The specified voltage drop corresponds to a dc output resistance (R_O).

The output current is measured by summing together the voltage across each inductor and passing the signal through a low-pass filter. This summer filter is the CS amplifier configured with resistors $R_{PH(X)}$ (summers), and R_{CS} and C_{CS} (filter). The output resistance of the regulator is set by the following equations, where R_L is the DCR of the output inductors:

$$R_O = \frac{R_{CS}}{R_{PH(x)}} \times R_L \quad (6)$$

$$C_{CS} = \frac{L}{R_L \times R_{CS}} \quad (7)$$

One has the flexibility of choosing either R_{CS} or $R_{PH(X)}$. It is best to select R_{CS} equal to 100 kΩ, and then solve for $R_{PH(X)}$ by rearranging Equation 6.

$$R_{PH}(x) = \frac{R_L}{R_O} \times R_{CS}$$

$$R_{PH(x)} = \frac{1.6\ \text{m}\Omega}{1.3\ \text{m}\Omega} \times 100\ \text{k}\Omega = 123\ \text{k}\Omega$$

Next, use Equation 6 to solve for C_{CS}.

$$C_{CS} = \frac{600\ \text{nH}}{1.6\ \text{m}\Omega \times 100\ \text{k}\Omega} = 3.75\ \text{nF}$$

It is best to have a dual location for C_{CS} in the layout so standard values can be used in parallel to get as close to the value desired. For this example, choosing C_{CS} to be 1.5 nF and 2.2 nF in parallel is a good choice. For best accuracy, C_{CS} should be a 5% or 10% NPO capacitor. The closest standard 1% value for $R_{PH(X)}$ is 124 kΩ.

INDUCTOR DCR TEMPERATURE CORRECTION

With the inductor's DCR being used as the sense element and copper wire being the source of the DCR, one needs to compensate for temperature changes of the inductor's winding. Fortunately, copper has a well-known temperature coefficient (TC) of 0.39%/°C.

If R_{CS} is designed to have an opposite and equal percentage change in resistance to that of the wire, it cancels the temperature variation of the inductor's DCR. Due to the nonlinear nature of NTC thermistors, resistors R_{CS1} and R_{CS2} are needed (see Figure 12) to linearize the NTC and produce the desired temperature tracking.

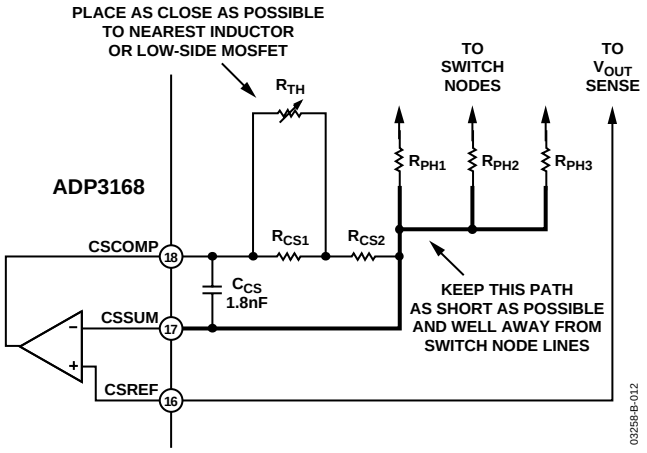

Figure 12. Temperature Compensation Circuit Values

The following procedure and expressions yield values to use for R_{CS1}, R_{CS2}, and R_{TH} (the thermistor value at 25°C) for a given R_{CS} value.

1. Select an NTC based on type and value. Because there is no value yet, start with a thermistor with a value close to R_{CS}. The NTC should also have an initial tolerance of better than 5%.
2. Based on the type of NTC, find its relative resistance value at two temperatures. The temperatures that work well are 50°C and 90°C. We will call these resistance values A ($R_{TH(50°C)}/R_{TH(25°C)}$) and B ($R_{TH(90°C)}/R_{TH(25°C)}$). Note that the NTC's relative value is always 1 at 25°C.
3. Find the relative value of R_{CS} required for each of these temperatures. This is based on the percentage change needed, which in this example is initially 0.39%/°C. These are called r_1 (1/(1 + TC × (T_1 – 25))) and r_2 (1/(1 + TC × (T_2 – 25))), where TC = 0.0039, T_1 = 50°C, and T_2 = 90°C.
4. Compute the relative values for R_{CS1}, R_{CS2}, and R_{TH} using:

$$R_{CS2} = \frac{(A-B)\times\gamma_1\times\gamma_2\times - A\times(1-B)\times\gamma_2 + B\times(1-A)\times\gamma_1}{A\times(1-B)\times\gamma_1 - B\times(1-A)\times\gamma_2 - (A-B)}$$

$$R_{CS1} = \frac{(1-A)}{\frac{1}{1-R_{CS2}} - \frac{A}{\gamma_1 - R_{CS2}}} \qquad (8)$$

$$R_{TH} = \frac{1}{\frac{1}{1-R_{CS2}} - \frac{1}{R_{CS1}}}$$

5. Calculate $R_{TH} = R_{TH} \times R_{CS}$, then select the closest value of thermistor available. Also compute a scaling factor k based on the ratio of the actual thermistor value used relative to the computed one:

$$k = \frac{R_{TH(ACTUAL)}}{R_{TH(CALCULATED)}} \qquad (9)$$

6. Finally, calculate values for R_{CS1} and R_{CS2} using Equation 10:

$$R_{CS1} = R_{CS} \times k \times \gamma_{CS1}$$
$$R_{CS2} = R_{CS} \times \left((1-k) + (k \times \gamma_{CS2})\right) \qquad (10)$$

For this example, R_{CS} has been chosen to be 100 kΩ , so we start with a thermistor value of 100 kΩ. Looking through available 0603 size thermistors, we find a Vishay NTHS0603N01N1003JR NTC thermistor with A = 0.3602 and B = 0.09174. From these we compute R_{CS1} = 0.3796, R_{CS2} = 0.7195, and R_{TH} = 1.0751. Solving for R_{TH} yields 107.51 kΩ, so we choose 100 kΩ, making k = 0.9302. Finally, we find R_{CS1} and R_{CS2} to be 35.3 kΩ and 73.9 kΩ. Choosing the closest 1% resistor values yields a choice of 35.7 kΩ and 73.2 kΩ.

OUTPUT OFFSET

Intel's specification requires that at no load the nominal output voltage of the regulator be offset to a lower value than the nominal voltage corresponding to the VID code. The offset is set by a constant current source flowing out of the FB pin (I_{FB}) and flowing through R_B. The value of R_B can be found using Equation 11:

$$R_B = \frac{V_{VID} - V_{ONL}}{I_{FB}}$$

$$R_B = \frac{1.5\text{ V} - 1.480\text{ V}}{15\ \mu\text{A}} = 1.33\text{ k}\Omega \qquad (11)$$

The closest standard 1% resistor value is 1.33 kΩ.

C_{OUT} SELECTION

The required output decoupling for the regulator is typically recommended by Intel for various processors and platforms. One can also use some simple design guidelines to determine what is required. These guidelines are based on having both bulk and ceramic capacitors in the system.

The first thing is to select the total amount of ceramic capacitance. This is based on the number and type of capacitor to be used. The best location for ceramics is inside the socket, with 12 to 18 of size 1206 being the physical limit. Others can be placed along the outer edge of the socket as well.

Combined ceramic values of 200 µF to 300 µF are recommended, usually made up of multiple 10 µF or 22 µF capacitors. Select the number of ceramics and then find the total ceramic capacitance (C_Z).

Next, there is an upper limit imposed on the total amount of bulk capacitance (C_X) when one considers the VID on-the-fly voltage stepping of the output (voltage step V_V in time t_V with error of V_{ERR}) and a lower limit based on meeting the critical capacitance for load release for a given maximum load step ΔI_O:

$$C_{x(MIN)} \geq \left(\frac{L \times \Delta I_O}{n \times R_O \times V_{VID}} - C_z \right) \quad (12)$$

$$C_{x(MAX)} \leq$$

$$\frac{L}{nK^2 R_O^2} \times \frac{V_V}{V_{VID}} \times \left(\sqrt{1 + \left(t_v \frac{V_{VID}}{V_V} \times \frac{nKR_O}{L} \right)^2} - 1 \right) - C_z \quad (13)$$

$$\text{where } K = 1n \left(\frac{V_{ERR}}{V_V} \right)$$

To meet the conditions of these expressions and transient response, the ESR of the bulk capacitor bank (R_X) should be less than two times the droop resistance, R_O. If the $C_{X(MIN)}$ is larger than $C_{X(MAX)}$, the system does not meet the VID on-the-fly specification and may require the use of a smaller inductor or more phases (and may have to increase the switching frequency to keep the output ripple the same).

For our example, 23 10 µF 1206 MLC capacitors (C_Z = 230 µF) were used. The VID on-the-fly step change is 250 mV in 150 µs with a setting error of 2.5 mV. Solving for the bulk capacitance yields

$$C_{x(MIN)} \leq \left(\frac{600 \text{ nH} \times 60 \text{ A}}{3 \times 1.3 \text{ m}\Omega \times 1.5 \text{ V}} - 230 \text{ µF} \right) = 5.92 \text{ mF}$$

$$C_{x(MAX)} \leq \frac{600 \text{ nH} \times 250 \text{ mV}}{3 \times 4.6^2 \times (1.3 \text{ m}\Omega)^2 \times 1.5 \text{ V}} \times$$

$$\left(\sqrt{1 + \left(\frac{150 \text{ µs} \times 1.5 \text{ V} \times 3 \times 4.6 \times 1.3 \text{ m}\Omega}{250 \text{ mV} \times 600 \text{ nH}} \right)^2} - 1 \right) - 230 \text{ µF}$$

$$= 23.9 \; mF$$

where k = 4.6

Using eight 820 µF A1-Polys with a typical ESR of 8 mΩ each yields C_X = 6.56 mF with an R_X = 1.0 mΩ.

One last check should be made to ensure that the ESL of the bulk capacitors (L_X) is low enough to limit the initial high frequency transient spike. This is tested using

$$L_x \leq C_z \times R$$
$$L_x \leq 230 \text{ µF} \times (1.3 \text{ m}\Omega)^2 = 389 \text{ pH} \quad (14)$$

In this example, L_X is 375 pH for the eight A1-Polys capacitors, which satisfies this limitation. If the L_X of the chosen bulk capacitor bank is too large, the number of capacitors must be increased.

One should note that for this multimode control technique, all ceramic designs can be used as long as the conditions of Equations 11, 12, and 13 are satisfied.

POWER MOSFETS

For this example, the N-channel power MOSFETs have been selected for one high-side switch and two low-side switches per phase. The main selection parameters for the power MOSFETs are $V_{GS(TH)}$, Q_G, C_{ISS}, C_{RSS}, and $R_{DS(ON)}$. The minimum gate drive voltage (the supply voltage to the ADP3418) dictates whether standard threshold or logic-level threshold MOSFETs must be used. With V_{GATE} ~10 V, logic-level threshold MOSFETs ($V_{GS(TH)}$ <2.5 V) are recommended.

The maximum output current I_O determines the $R_{DS(ON)}$ requirement for the low-side (synchronous) MOSFETs. The ADP3168, balances currents between phases, thus the current in each low-side MOSFET is the output current divided by the total number of MOSFETs (n_{SF}). With conduction losses being dominant, the following expression shows the total power being dissipated in each synchronous MOSFET in terms of the ripple current per phase (I_R) and average total output current (I_O):

$$P_{SF} = (1-D)\times\left[\left(\frac{I_O}{n_{SF}}\right)^2 + \frac{1}{12}\times\left(\frac{n\,I_R}{n_{SF}}\right)^2\right]\times R_{DS(SF)} \quad (15)$$

Knowing the maximum output current being designed for and the maximum allowed power dissipation, one can find the required $R_{DS(ON)}$ for the MOSFET. For D-PAK MOSFETs up to an ambient temperature of 50°C, a safe limit for PSF is 1 W to 1.5 W at 120°C junction temperature. Thus, for this example (65 A maximum), we find $R_{DS(SF)}$ (per MOSFET) < 8.7 mΩ. This $R_{DS(SF)}$ is also at a junction temperature of about 120°C, so we need to make sure we account for this when making this selection. For this example, we selected two lower-side MOSFETs at 7 mΩ each at room temperature, which gives 8.4 mΩ at high temperature.

Another important factor for the synchronous MOSFET is the input capacitance and feedback capacitance. The ratio of the feedback to input needs to be small (less than 10% is recommended) to prevent accidental turn-on of the synchronous MOSFETs when the switch node goes high.

Also, the time to switch the synchronous MOSFETs off should not exceed the nonoverlap dead time of the MOSFET driver (40 ns typical for the ADP3418). The output impedance of the driver is about 2 Ω and the typical MOSFET input gate resistances are about 1 Ω to 2 Ω, so a total gate capacitance of less than 6000 pF should be adhered to. Because there are two MOSFETs in parallel, the input capacitance for each synchronous MOSFET should be limited to 3000 pF.

The high-side (main) MOSFET must be able to handle two main power dissipation components: conduction and switching losses. The switching loss relates to the amount of time it takes for the main MOSFET to turn on and off, and to the current and voltage that are being switched. Basing the switching speed on the rise and fall time of the gate driver impedance and MOSFET input capacitance, the following expression provides an approximate value for the switching loss per main MOSFET, where n_{MF} is the total number of main MOSFETs:

$$P_{S(MF)} = 2\times f_{SW}\times\frac{V_{CC}\times I_O}{n_{MF}}\times R_G\times\frac{n_{MF}}{n}\times C_{ISS} \quad (16)$$

Here, R_G is the total gate resistance (2 Ω for the ADP3418 and about 1 Ω for typical high speed switching MOSFETs, making R_G = 3 Ω) and C_{ISS} is the input capacitance of the main MOSFET. Note that adding more main MOSFETs (n_{MF}) does not really help the switching loss per MOSFET because the additional gate capacitance slows switching. The best thing to reduce switching loss is to use lower gate capacitance devices.

The conduction loss of the main MOSFET is given by the following, where $R_{DS(MF)}$ is the ON resistance of the MOSFET:

$$P_{C(MF)} = D\times\left[\left(\frac{I_O}{n_{MF}}\right)^2 + \frac{1}{12}\times\left(\frac{n\times I_R}{n_{MF}}\right)^2\right]\times R_{DS(MF)} \quad (17)$$

Typically, for main MOSFETs, the highest speed (low C_{ISS}) device is preferred, but these usually have higher ON resistance. Select a device that meets the total power dissipation (about 1.5 W for a single D-PAK) when combining the switching and conduction losses.

For this example, an Infineon IPD12N03L was selected as the main MOSFET (three total; n_{MF} = 3), with a C_{ISS} = 1460 pF (max) and $R_{DS(MF)}$ = 14 mΩ (max at T_J = 120°C), and an Infineon IPD06N03L was selected as the synchronous MOSFET (six total; n_{SF} = 6), with C_{ISS} = 2370 pF (max) and $R_{DS(SF)}$ = 8.4 mΩ (max at T_J = 120°C). The synchronous MOSFET C_{ISS} is less than 3000 pF, satisfying that requirement. Solving for the power dissipation per MOSFET at I_O = 65 A and I_R = 8.2 A yields 863 mW for each synchronous MOSFET and 1.44 W for each main MOSFET. These numbers work well considering there is usually more PCB area available for each main MOSFET vs. each synchronous MOSFET.

One last thing to consider is the power dissipation in the driver for each phase. This is best described in terms of the Q_G for the MOSFETs and is given by the following, where Q_{GMF} is the total gate charge for each main MOSFET and Q_{GSF} is the total gate charge for each synchronous MOSFET:

$$P_{DRV} = \left[\frac{f_{SW}}{2\times n}\times\left(n_{MF}\times Q_{GMF} + n_{SF}\times Q_{GSF}\right) + I_{CC}\right]\times V_{CC} \quad (18)$$

Also shown is the standby dissipation factor ($I_{CC}\times V_{CC}$) for the driver. For the ADP3418, the maximum dissipation should be less than 400 mW. For our example, with I_{CC} = 7 mA, Q_{GMF} = 22.8 nC, and Q_{GSF} = 34.3 nC, we find 260 mW in each driver, which is below the 400 mW dissipation limit. See the ADP3418 data sheet for more details.

RAMP RESISTOR SELECTION

The ramp resistor (R_R) is used for setting the size of the internal PWM ramp. The value of this resistor is chosen to provide the best combination of thermal balance, stability, and transient response. This expression determines the optimum value:

$$R_R = \frac{A_R \times L}{3 \times A_D \times R_{DS} \times C_R}$$
$$R_R = \frac{0.2 \times 600\ \text{nH}}{3 \times 5 \times 4.2\ \text{m}\Omega \times 5\ \text{pF}} = 381\ \text{k}\Omega \quad (19)$$

where A_R is the internal ramp amplifier gain, A_D is the current balancing amplifier gain, R_{DS} is the total low-side MOSFET ON resistance, and C_R is the internal ramp capacitor value. The closest standard 1% resistor value is 383 kΩ.

The internal ramp voltage magnitude can be calculated using

$$V_R = \frac{A_R \times (1 - D) \times V_{VID}}{R_R \times C_R \times f_{SW}}$$
$$V_R = \frac{0.2 \times (1 - 0.125) \times 1.5\ \text{V}}{383\ \text{k}\Omega \times 5\ \text{pF} \times 267\ \text{kHz}} \quad (20)$$

The size of the internal ramp can be made larger or smaller. If it is made larger, stability and transient response improve, but thermal balance degrades. Likewise, if the ramp is made smaller, thermal balance improves at the sacrifice of transient response and stability. The factor of three in the denominator of Equation 19 sets a ramp size that gives an optimal balance for good stability, transient response, and thermal balance.

COMP PIN RAMP

There is a ramp signal on the COMP pin due to the droop voltage and output voltage ramps. This ramp amplitude adds to the internal ramp to produce the following overall ramp signal at the PWM input.

$$V_{RT} = \frac{V_R}{\left(1 - \frac{2 \times (1 - n \times D)}{n \times f_{SW} \times C_X \times R_O}\right)} \quad (21)$$

For this example, the overall ramp signal is found to be 0.63 V.

CURRENT-LIMIT SET POINT

To select the current-limit set point, first find the resistor value for R_{LIM}. The current limit threshold for the ADP3168 is set with a 3 V source (V_{LIM}) across R_{LIM} with a gain of 10.4 mV/µA (A_{LIM}). R_{LIM} can be found using the following:

$$R_{LIM} = \frac{A_{LIM} \times V_{LIM}}{I_{LIM} \times R_O} \quad (22)$$

For values of R_{LIM} greater than 500 kΩ, the current limit may be lower than expected, so some adjustment of R_{LIM} may be needed. Here, I_{LIM} is the average current limit for the output of the supply. For our example, choosing 120 A for I_{LIM}, we find R_{LIM} to be 200 kΩ, for which we chose 200 kΩ as the nearest 1% value.

The per-phase current limit described earlier has its limit determined by the following:

$$I_{PHLIM} \cong \frac{V_{COMP(MAX)} - V_R - V_{BIAS}}{A_D \times R_{DS(MAX)}} + \frac{I_R}{2} \quad (23)$$

For the ADP3168, the maximum COMP voltage ($V_{COMP(MAX)}$) is 3.3 V, the COMP pin bias voltage (V_{BIAS}) is 1.2 V, and the current balancing amplifier gain (A_D) is 5. Using V_R of 0.63 V and $R_{DS(MAX)}$ of 4.2 mΩ (low-side ON resistance at 150°C), we find a per-phase limit of 66 A.

This limit can be adjusted by changing the ramp voltage V_R, but make sure not to set the per-phase limit lower than the average per-phase current (I_{LIM}/n).

There is also a per-phase initial duty cycle limit determined by

$$D_{MAX} = D \times \frac{V_{COMP(MAX)} - V_{BIAS}}{V_{RT}} \quad (24)$$

For this example, the maximum duty cycle is found to be 0.42.

FEEDBACK LOOP COMPENSATION DESIGN

Optimized compensation of the ADP3168 allows the best possible response of the regulator's output to a load change. The basis for determining the optimum compensation is to make the regulator and output decoupling appear as an output impedance that is entirely resistive over the widest possible frequency range, including dc, and equal to the droop resistance (R_O). With the resistive output impedance, the output voltage droops in proportion with the load current at any load current slew rate; this ensures the optimal positioning and allows the minimization of the output decoupling.

With the multimode feedback structure of the ADP3168, the feedback compensation must be set to make the converter's output impedance, working in parallel with the output decoupling, meet this goal. There are several poles and zeros created by the output inductor and decoupling capacitors (output filter) that need to be compensated for.

A type-three compensator on the voltage feedback is adequate for proper compensation of the output filter. The expressions given in Equations 25 to 29 are intended to yield an optimal starting point for the design; some adjustments may be necessary to account for PCB and component parasitic effects (see the Tuning Procedure for the ADP3168).

The first step is to compute the time constants for all of the poles and zeros in the system:

$$R_E = n \times R_O \times A_D \times R_{DS} + \frac{R_L \times V_{RT}}{V_{DID}} + \frac{2 \times L \times (1 - n \times D) \times V_{RT}}{n \times C_X \times R_O \times V_{VID}}$$

$$R_E = 3 \times 1.3\ \text{m}\Omega + 5 \times 4.2\ \text{m}\Omega + \frac{1.6\ \text{m}\Omega \times 0.63\ \text{V}}{1.5\ \text{V}} + \frac{2 \times 600\ \text{nH} \times (1 - 0.375) \times 0.63\ \text{V}}{3 \times 6.56\ \text{mF} \times 1.3\ \text{m}\Omega \times 1.5\ \text{V}}\ 37.9\ \text{m}\Omega \quad (25)$$

$$T_A = C_X \times (R_O - R') + \frac{L_X}{R_O} \times \frac{R_O - R'}{R_X} = 6.56\ \text{mF} \times (1.3\ \text{m}\Omega - 0.6\ \text{m}\Omega) + \frac{375\ \text{pH}}{1.3\ \text{m}\Omega} \times \frac{1.3\ \text{m}\Omega - 0.6\ \text{m}\Omega}{1.0\ \text{m}\Omega} = 4.79\ \mu\text{s} \quad (26)$$

$$T_B = (R_X + R' - R_O) \times C_X = (1.0\ \text{m}\Omega + 0.6\ \text{m}\Omega - 1.3\ \text{m}\Omega) \times 6.56\ \text{mF} = 1.97\ \mu\text{s} \quad (27)$$

$$T_C = \frac{V_{RT} \times \left(L - \frac{A_D \times R_{DS}}{2 \times f_{SW}}\right)}{V_{VID} \times R_E} = \frac{0.63\ \text{V} \times \left(600\ \text{nH} = \frac{5 \times 4.2\ \text{m}\Omega}{2 \times 267\ \text{kHz}}\right)}{1.5\ \text{V} \times 37.9\ \text{m}\Omega} = 6.2\ \mu\text{s} \quad (28)$$

$$T_D = \frac{C_X \times C_Z \times R_O^2}{C_X \times (R_O - R') + C_Z \times R_O} = \frac{6.56\ \text{mF} \times 230\ \mu\text{F} \times (1.3\ \text{m}\Omega)^2}{6.56\ \text{mF} \times (1.3\ \text{m}\Omega - 0.6\ \text{m}\Omega) + 230\ \mu\text{F} \times 1.3\ \text{m}\Omega} = 521\ \text{ns} \quad (29)$$

where, for the ADP3168, R' is the PCB resistance from the bulk capacitors to the ceramics and where R_{DS} is the total low side MOSFET ON resistance per phase. For this example, A_D is 5, V_{RT} equals 0.63 V, R' is approximately 0.6 mΩ (assuming a 4-layer motherboard), and L_X is 375 pH for the eight Al-Poly capacitors.

The compensation values can be solved using the following:

$$C_A = \frac{n \times R_O \times T_A}{R_E \times R_B} \quad (30)$$

$$CA = \frac{3 \times 1.3\ \text{m}\Omega \times 4.79\ \mu\text{s}}{37.9\ \text{m}\Omega \times 1.33\ \text{k}\Omega} = 371\ \text{pF}$$

$$R_A = \frac{T_C}{C_A} = \frac{6.2\ \mu\text{s}}{371\ \text{pF}} = 16.7\ \text{k}\Omega \quad (31)$$

$$C_B = \frac{T_B}{R_B} = \frac{1.97\ \mu\text{s}}{1.33\ \text{k}\Omega} = 1.48\ \text{nF} \quad (32)$$

$$C_{FB} = \frac{T_D}{R_A} = \frac{521\ \text{ns}}{16.7\ \text{k}\Omega} = 31.2\ \text{pF} \quad (33)$$

Choosing the closest standard values for the components yields

$$C_A = 390\ \text{pF},\ R_A = 16.9\ \text{k}\Omega,\ C_B = 1.5\ \text{nF},\ C_{FB} = 33\ \text{pF}$$

Figure 13 shows the typical transient response using the compensation values.

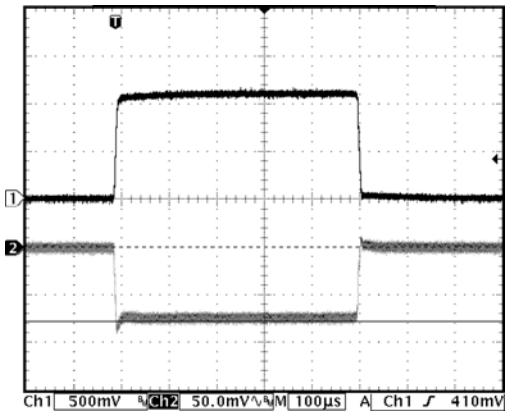

Figure 13. Typical Transient Response for Design Example

C_{IN} SELECTION AND INPUT CURRENT DI/DT REDUCTION

In continuous inductor current mode, the source current of the high-side MOSFET is approximately a square wave with a duty ratio equal to n × V_{OUT}/V_{IN} and an amplitude of one-nth of the maximum output current. To prevent large voltage transients, a low ESR input capacitor sized for the maximum rms current must be used. The maximum rms capacitor current is given by

$$I_{CRMS} = D \times I_O \times \sqrt{\frac{1}{N \times D} - 1}$$
$$I_{CRMS} = 0.125 \times 65\,A \times \sqrt{\frac{1}{3 \times 0.125} - 1} = 10.5A \quad (34)$$

Note that the capacitor manufacturer's ripple current ratings are often based on only 2,000 hours of life. This makes it advisable to further derate the capacitor or choose a capacitor rated at a higher temperature than required. Several capacitors may be placed in parallel to meet size or height requirements in the design. In this example, the input capacitor bank is formed by three 2,200 µF, 16 V Nichicon capacitors with a ripple current rating of 3.5 A each.

To reduce the input current di/dt to a level below the recommended maximum of 0.1 A/µs, an additional small inductor (L > 1 µH @ 15 A) should be inserted between the converter and the supply bus. That inductor also acts as a filter between the converter and the primary power source.

$$R_{CS2(NEW)} = R_{SC2(OLD)} \times \frac{V_{NL} - V_{FLCOLD}}{V_{NL} - V_{FLHOT}} \quad (35)$$

TUNING PROCEDURE FOR THE ADP3168

1. Build circuit based on compensation values computed from design spreadsheet.
2. Hook up dc load to circuit, turn on, and verify operation. Also check for jitter at no-load and full-load.

DC Loadline Setting

3. Measure output voltage at no-load (V_{NL}). Verify that it is within tolerance.
4. Measure output voltage at full-load cold (V_{FLCOLD}). Let board set for ~10 minutes at full-load and measure output (V_{FLHOT}). If there is a change of more than a couple of millivolts, adjust R_{CS1} and R_{CS2} using Equations 35 and 37.
5. Repeat Step 4 until cold and hot voltage measurements remain the same.
6. Measure output voltage from no-load to full-load using 5 A steps. Compute the loadline slope for each change and then average to get overall loadline slope (R_{OMEAS}).
7. If R_{OMEAS} is off from R_O by more than 0.05 mΩ, use the following to adjust the R_{PH} values:

$$R_{PH(NEW)} = R_{PH(OLD)} \times \frac{R_{OMEAS}}{R_O} \quad (36)$$

8. Repeat Steps 6 and 7 to check loadline and repeat adjustments if necessary.
9. Once complete with dc loadline adjustment, do not change R_{PH}, R_{CS1}, R_{CS2}, or R_{TH} for rest of procedure.
10. Measure output ripple at no-load and full-load with scope and make sure it is within specifications.

$$R_{CS2(NEW)} = \frac{1}{\dfrac{R_{CS1(OLD)} + R_{TH(25°C)}}{R_{CS1(OLD)} \times R_{TH(25°C)} + \left(R_{CS1(OLD)} - R_{CS2(NEW)}\right) \times \left(R_{CS1(OLD)} - R_{TH(25°C)}\right)} - \dfrac{1}{R_{TH(25°C)}}} \quad (37)$$

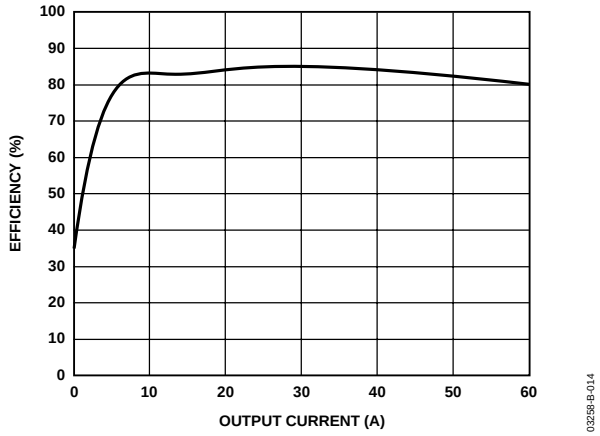

Figure 14. Efficiency of the Circuit of Figure 11 vs. Output Current

AC Loadline Setting

11. Remove dc load from circuit and hook up dynamic load.
12. Hook up scope to output voltage and set to dc coupling with time scale at 100 µs/div.
13. Set dynamic load for a transient step of about 40 A at 1 kHz with 50% duty cycle.
14. Measure output waveform (may have to use dc offset on scope to see waveform). Try to use vertical scale of 100 mV/div or finer.
15. This waveform should look something like Figure 15. Use the horizontal cursors to measure V_{ACDRP} and V_{DCDRP} as shown. *Do not measure the undershoot or overshoot that happens immediately after the step*.

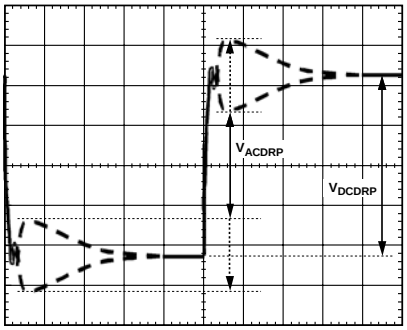

Figure 15. AC Loadline Waveform

16. If the V_{ACDRP} and V_{DCDRP} are different by more than a few millivolts, use Equation 38 to adjust C_{CS}. Parallel different values to get the right one because there are limited standard capacitor values available. (Make sure that there are locations for two capacitors in the layout for this.)

$$C_{CS(NEW)} = C_{CS(OLD)} \times \frac{V_{ACDRP}}{V_{DCDRP}} \quad (38)$$

17. Repeat Steps 11 to 13, making adjustments if necessary. Once complete, do not change C_{CS} again in the procedure.
18. Set dynamic load step to maximum step size (do not use a step size larger than needed) and verify that the output waveform is square (which means V_{ACDRP} and V_{DCDRP} are equal).*Make sure load step slew rate and turn-on are set for a slew rate of ~150 A/µs to 250 A/µs (for example, a load step of 50 A should take 200 ns to 300 ns) with no overshoot*. Some dynamic loads have an excessive turn-on overshoot if a minimum current is not set properly. (This is an issue if using a VTT tool.)

Initial Transient Setting

19. With dynamic load still set at maximum step size, expand scope time scale to see 2 µs/div to 5 µs/div. The waveform may have two overshoots and one minor undershoot (see Figure 16). Here, V_{DROOP} is the final desired value.

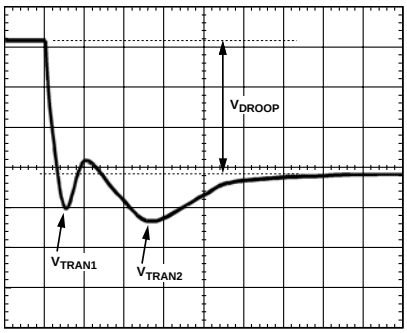

Figure 16. Transient Setting Waveform

20. If both overshoots are larger than desired, try making the adjustments described below. (Note: If these adjustments do not change the response, you are limited by the output decoupling.) Check the output response each time you make a change as well as the switching nodes (to make sure the response is still stable).
    a. Make ramp resistor larger by 25% (R_{RAMP}).
    b. For V_{TRAN1}, increase C_B or increase switching frequency.
    c. For V_{TRAN2}, increase R_A and decrease C_A by 25%.
21. For load release (see Figure 17), if $V_{TRANREL}$ is larger than V_{TRAN1} (see Figure 16), there is not enough output capacitance. You will either need more capacitance or have to make the inductor values smaller. (If you change inductors, you will need to start the design over using the spreadsheet and this tuning procedure.)

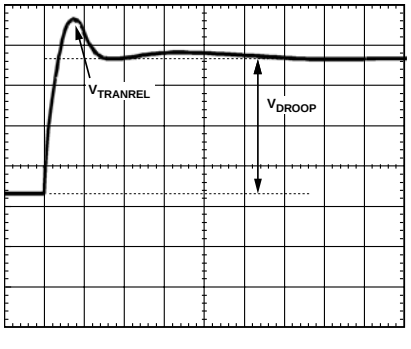

Figure 17. Transient Setting Waveform

Because the ADP3168 turns off all of the phases (switches inductors to ground), there is no ripple voltage present during load release. Thus, you do not have to add headroom for ripple, allowing your load release $V_{TRANREL}$ to be larger than V_{TRAN1} by the amount of ripple and still meet specifications.

If V_{TRAN1} and $V_{TRANREL}$ are less than the desired final droop, this implies that capacitors can be removed. When removing capacitors, check the output ripple voltage as well to make sure it is still within specifications.

LAYOUT AND COMPONENT PLACEMENT

The following guidelines are recommended for optimal performance of a switching regulator in a PC system. Key layout issues are illustrated in Figure 18.

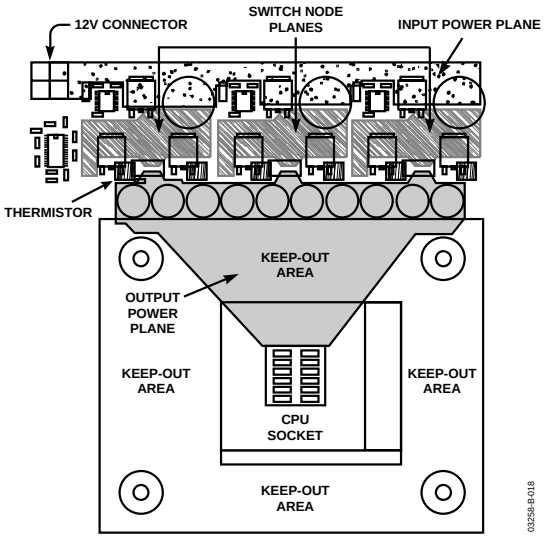

Figure 18. Layout Recommendations

GENERAL RECOMMENDATIONS

For good results, a PCB with at least four layers is recommended. This should allow the needed versatility for control circuitry interconnections with optimal placement, power planes for ground, input, and output power, and wide interconnection traces in the rest of the power delivery current paths. Keep in mind that each square unit of 1 ounce copper trace has a resistance of ~0.53 mΩ at room temperature.

Whenever high currents are routed between PCB layers, vias should be used liberally to create several parallel current paths so that the resistance and inductance introduced by the current paths is minimized and the via current rating is not exceeded.

If critical signal lines (including the output voltage sense lines of the ADP3168) must cross through power circuitry, it is best if a signal ground plane can be interposed between those signal lines and the traces of the power circuitry. This creates a shield to minimize noise injection into the signals at the expense of making signal ground a bit noisier.

An analog ground plane should be used around and under the ADP3168 as a reference for the components associated with the controller. This plane should be tied to the nearest output decoupling capacitor ground and should not be tied to any other power circuitry to prevent power currents from flowing in it.

The components around the ADP3168 should be located close to the controller with short traces. The most important traces to keep short and away from other traces are the FB and CSSUM pins. See Figure 18 for details on layout for the CSSUM node.

The output capacitors should be connected as close as possible to the load (or connector) that receives the power (e.g., a microprocessor core). If the load is distributed, the capacitors should also be distributed and generally in proportion to where the load tends to be more dynamic.

Avoid crossing signal lines over the switching power path loop, as described next.

POWER CIRCUITRY

The switching power path should be routed on the PCB to encompass the shortest possible length in order to minimize radiated switching noise energy (i.e., EMI) and conduction losses in the board. Failure to take proper precautions often results in EMI problems for the entire PC system as well as noise-related operational problems in the power converter control circuitry. The switching power path is the loop formed by the current path through the input capacitors and the power MOSFETs including all interconnecting PCB traces and planes. Using short and wide interconnection traces is critical in this path because it minimizes the inductance in the switching loop, which can cause high energy ringing, and it accommodates the high current demand with minimal voltage loss.

Whenever a power dissipating component (e.g., a power MOSFET) is soldered to a PCB, the liberal use of vias, both directly on the mounting pad and immediately surrounding it, is recommended. Two important reasons for this are improved current rating through the vias and improved thermal performance from vias extended to the opposite side of the PCB, where a plane can more readily transfer the heat to the air. Make a mirror image of any pad being used to heat sink the MOSFETs on the opposite side of the PCB to achieve the best thermal dissipation to the air around the board. To further improve thermal performance, use the largest possible pad area.

The output power path should also be routed to encompass a short distance. The output power path is formed by the current path through the inductor, the output capacitors, and the load.

For best EMI containment, a solid power ground plane should be used as one of the inner layers extending fully under all the power components.

SIGNAL CIRCUITRY

The output voltage is sensed and regulated between the FB pin and the FBRTN pin, which connects to the signal ground at the load. To avoid differential mode noise pickup in the sensed signal, the loop area should be small. Thus the FB and FBRTN traces should be routed adjacent to each other on top of the power ground plane back to the controller.

Connect the feedback traces from the switch nodes as close as possible to the inductor. The CSREF signal should be connected to the output voltage at the nearest inductor to the controller.

OUTLINE DIMENSIONS

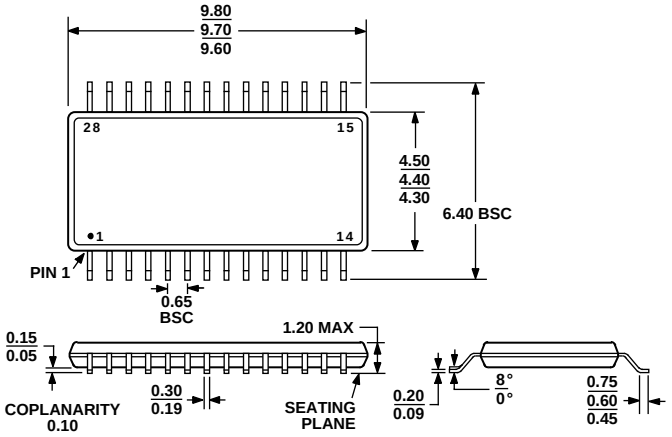

Figure 19. 28-Lead Thin Shrink Small Outline Package [TSSOP] (RU-28)
Dimensions shown in millimeters

ORDERING GUIDE

Model	Temperature Range	Package Options	Quantity per Reel
ADP3168JRU-REEL7	0°C to 85°C	RU-28 (TSSOP-28)	1000
ADP3168JRU-REEL	0°C to 85°C	RU-28 (TSSOP-28)	2500
ADP3168JRUZ-REEL[1]	0°C to 85°C	RU-28 (TSSOP-28)	2500

[1] Z = Pb-free part.

© 2004 Analog Devices, Inc. All rights reserved. Trademarks and registered trademarks are the property of their respective owners.
C03258-0-12/04(B)